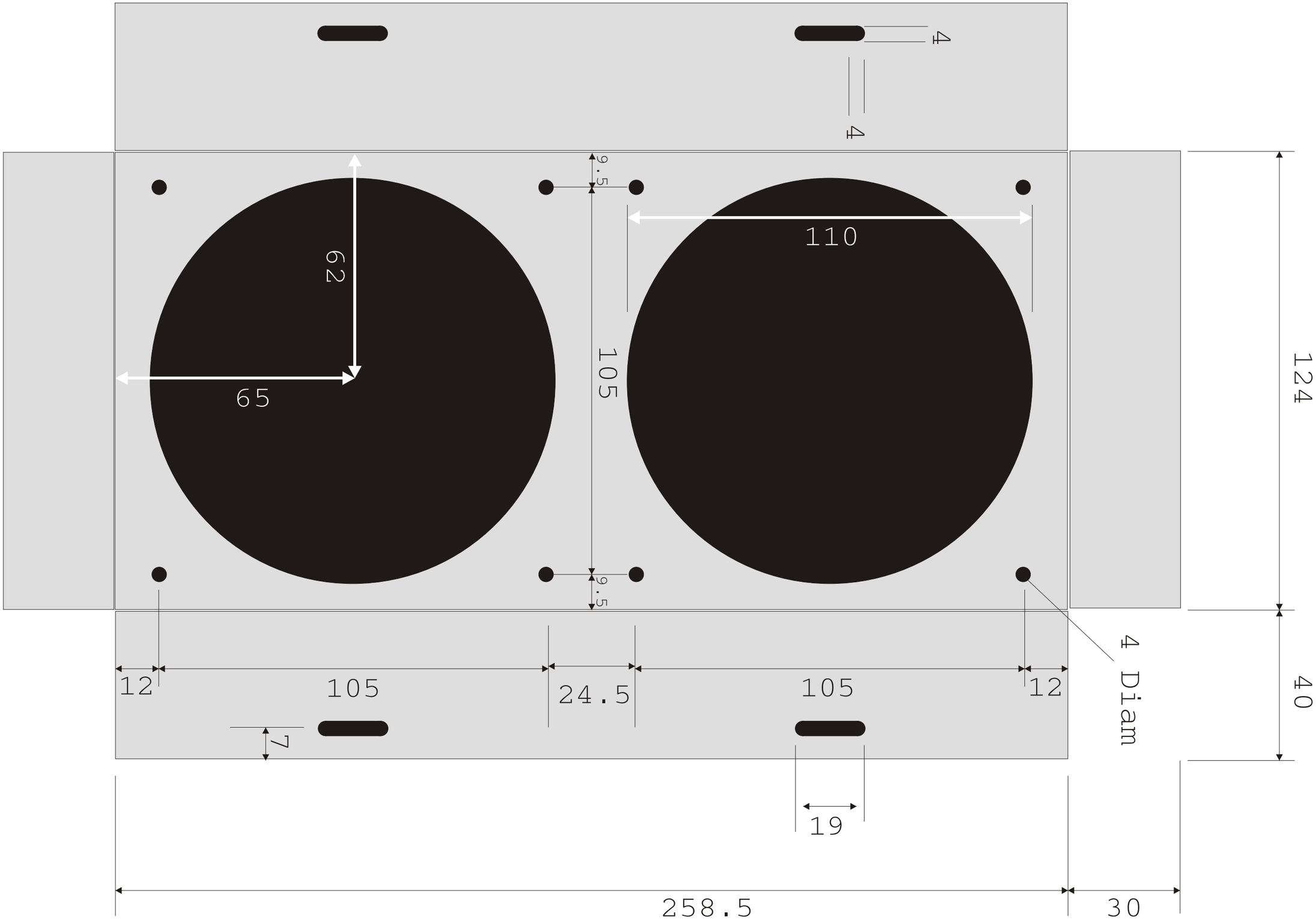

UNITS: MM
MATERIAL: 2mm Aluminium Sheet

www.Over-Clock.com
Thermochill HE120.2 Shroud MkII

MACoyles - 15/9/04